GRID LOCATION	BOTTOM ELEVATION
1-2/E	+12.313

	NAME	DATE
Comp By		
Inspect By		
Welder		
Welder		
Weld insp.		
Final insp.		

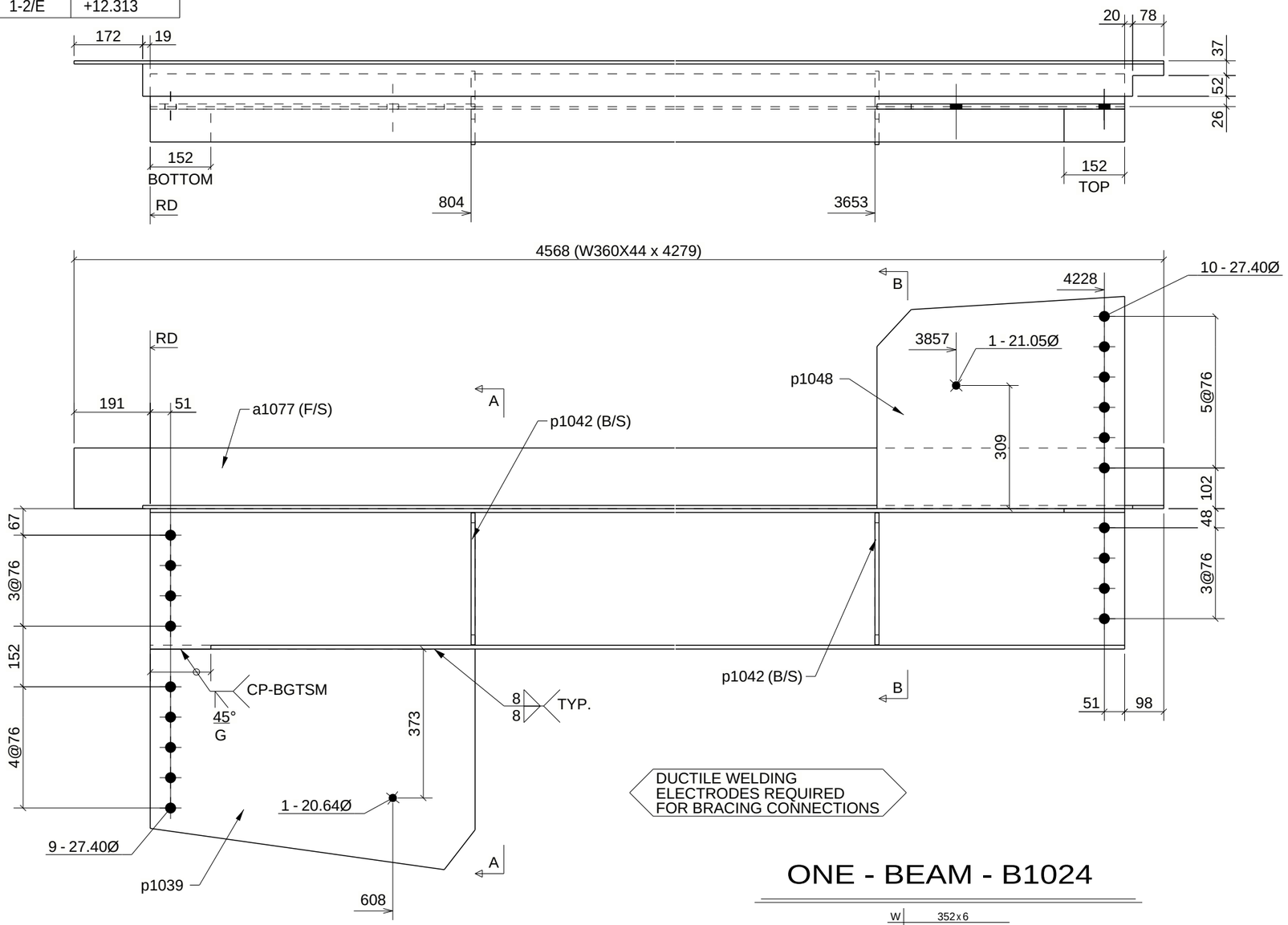

DUCTILE WELDING
ELECTRODES REQUIRED
FOR BRACING CONNECTIONS

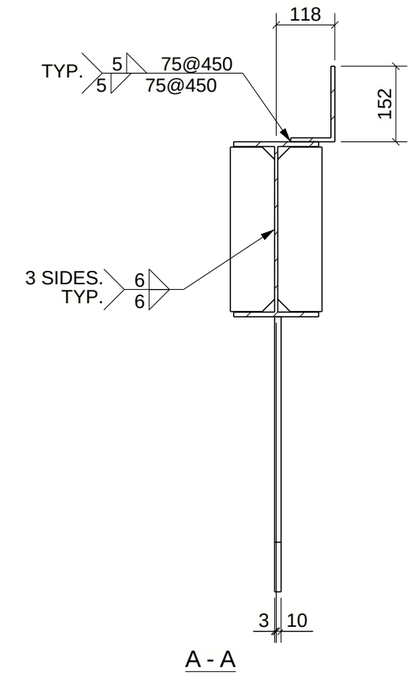

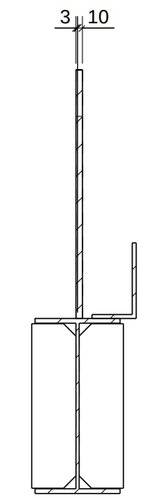

ONE - BEAM - B1024

W	352x6
F	171x10

BILL OF MATERIAL

MARK	QTY	DESCRIPTION	LENGTH	WEIGHT	REMARKS
B1024	1	BEAM			
B1024	1	W360X44	4279	192	PRIMER 350W
a1077	1	L152X89X7.9	4568	67	350W
p1039	1	PL13X553	814	42	300W
p1042	4	PL10X89	331	9	300W
p1048	1	PL13X532	621	32	300W
		TOTAL WEIGHT THIS DRAWING		341	

REV	DESCRIPTION	DATE
1	RE-ISSUED FOR FABRICATION-TRANS. #12	06/18/2020
0	ISSUED FOR FABRICATION-TRANS. #9	06/11/2020
A	ISSUED FOR APPROVAL	05/04/2020

West Coast Steel Ltd.
2990 Christmas Way,
Coquitlam, BC, Tel: 604 554 0171

DESCRIPTION	BEAM	Ref.	E101
PROJECT NAME	CHILLIWACK VOLKSWAGEN DEALERSHIP		
DRAWN BY	WIM Inc. Steel Detailing	JOB No.	DRG No.
DATE DRAWN	05/01/2020	WCS-231	B1024

Tekla Structures