GRID LOCATION	BOTTOM ELEVATION
4a-3a/H-G	-9"

	NAME	DATE
Comp By		
Inspect By		
Welder		
Welder		
Weld insp.		
Final insp.		

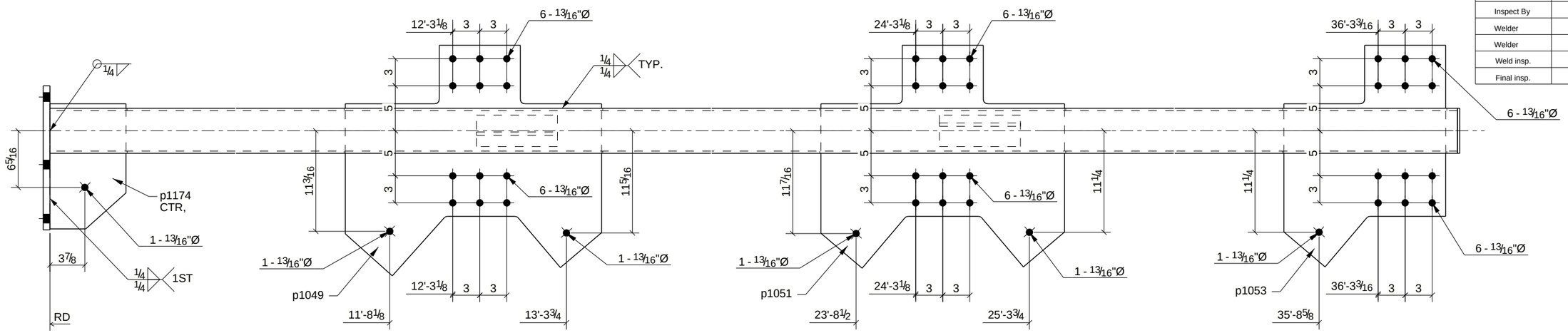

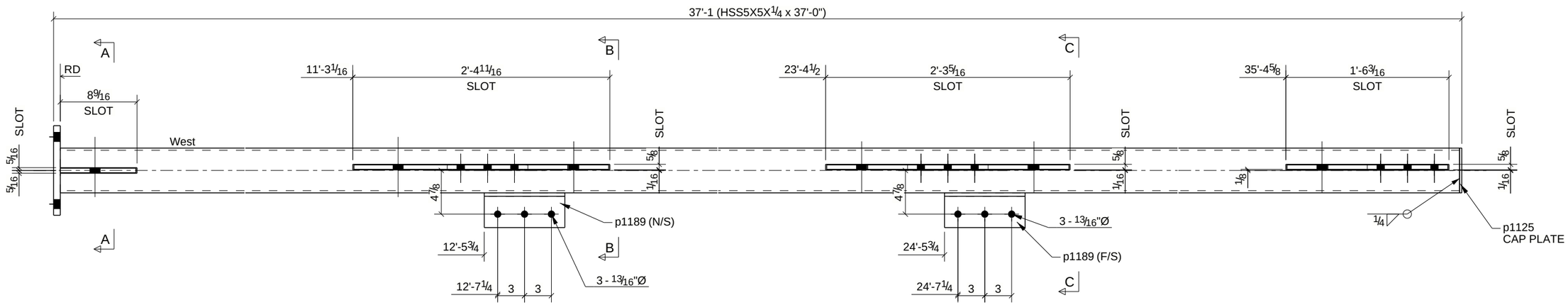

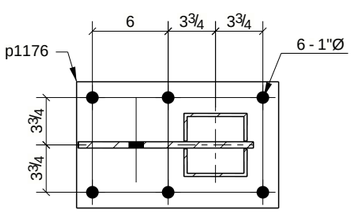

A - A

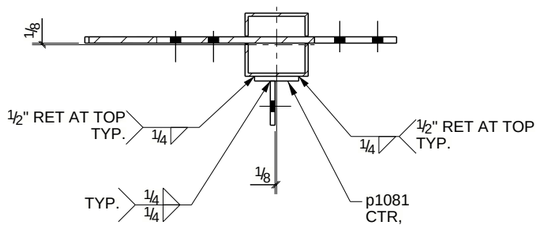

B - B

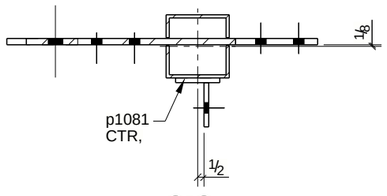

C - C

ONE - COLUMN - C1021

BILL OF MATERIAL

MARK	QTY	DESCRIPTION	LENGTH	WEIGHT(lbf)	REMARKS
C1021	1	COLUMN			Coating: PRIMER
C1021	1	HSS5X5X1/4	37'-0"	541	350W-CLASS C
p1049	1	PL1/2"X25 5/8"	2'-4 7/16"	69	300W
p1051	1	PL1/2"X24 3/4"	2'-3 1/16"	65	300W
p1053	1	PL1/2"X17 15/16"	2'-0 5/8"	44	300W
p1081	2	FL3/8"X3 1/2"	0'-9"	7	300W
p1125	1	FL1/4"X5"	0'-5"	2	300W
p1174	1	PL1/2"X8 7/16"	1'-1 7/8"	15	300W
p1176	1	FL3/4"X10"	1'-4"	34	300W
p1189	2	FL3/8"X3 1/2"	0'-9"	7	300W
		TOTAL WEIGHT THIS DRAWING(lbf)		785	

REV	DESCRIPTION	DATE
0	ISSUED FOR FABRICATION	10/19/2022
A	ISSUED FOR APPROVAL	09/02/2022

ANVIL IRONWORKS Ltd.
9795 Wittner Road, Kamloops, BC
Tel: 250 573 1115

DESCRIPTION	COLUMN		
PROJECT NAME	TRUE CONSULTING BUILDING		Ref. E100
DRAWN BY	WIM Inc. Steel Detailing	JOB No.	DRG No.
DATE DRAWN	08/30/2022	22-8148	C1021

Tekla Structures